BRIO + (4) User Manual

Class A (EN 12184)

Warning! Do not, under any circumstance, climb a slope greater than the maximum climbing angle (3 degree) with this power mobility. Any attempt to climb a slope steeper/greater than 3 degree may put your power mobility in an unstable position and cause it to tip. When on any sort of an incline or decline slope, never place the power mobility in freewheel mode.

MAX CLIMBING ANGLE: 3 Degree!

HEARTWAY Manufacturer

HEARTWAY MEDICAL PRODUCTS CO., LTD.
NO 6. Gongyequ 25th, Road. Nantun Dist. Taichung City 408, Taiwan ROC

The users need to consult the instructions of the device for informaiton on how to use it properly.

CE

SAFETY INSTRUCTION

◆ **General**

Always use a seat belt, and keep your feet on the scooter all the time.	Never operate the scooter while you are under the influence of alcohol.
Never use electronic radio transmitters such as walkie-talkies, or cellular phones.	Make sure that there are no obstacles behind you while reserving your scooter.
Do not make a sharp turn or a sudden stop while riding your scooter.	Do not rider your scooter in traffic.

Do not attempt to climb curbs greater than limitation show on Technical Specification	Do not leave your hands and legs off the scooter when driving.
Do not rider your scooter during snow in order to avoid accident on slippery road.	Do not allow unsupervised children to play near this equipment while the batteries are charging.
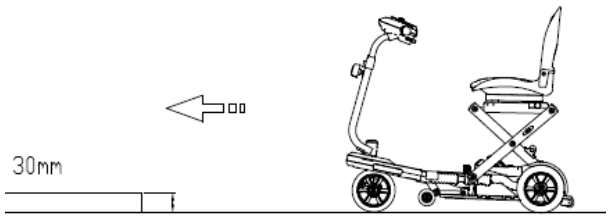 Be aware of obstacle height	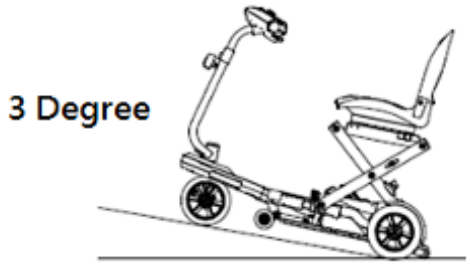 Be aware of safety slope

- Warning – Don’t operate your scooter for the first time without completely reading and understanding this user manual.

1. Don’t operate scooter on public streets and roadways. Be aware that it may be difficult for traffic to see you when you are seated on the scooter. Obey all local pedestrian traffic rules. Wait until your path is clear of traffic, and then proceed with extreme cautions.
2. To prevent injury to yourself or others, always ensure that the power is switched off when getting on or off of the scooter.
3. Always check that the drive wheels are engaged (drive mode) before driving. Do not switch off

the power when the scooter is still moving forward. This will bring the chair to an extremely abrupt stop.

4. Do not use this product or any available optional equipment without first completely reading and understanding these instructions. If you are unable to understand the warnings, cautions or instructions, contact a healthcare professional, the dealers or technical supports before attempting to use this equipment, otherwise, injury or damage may occur.
5. There are certain situations, including some medical conditions, where the scooter user will need to practice operating the scooter in the presence of a trained attendant. A trained attendant can be defined as a family member or care professional especially trained in assisting a scooter user in various daily living activities. Consult with your physician if you are taking any medication that may affect your ability to operate your scooter safely.
6. Do not attempt to lift or move a power scooter by any of its removable parts including the armrests, seats or shrouds. Personal injury and damage to the power chair may result.
7. Never try to use your scooter beyond its limitations as described in this manual.
8. Please do not sit on your scooter while it is in a moving vehicle.
9. Keep your hands away from the wheels (tires) while driving scooters. Be aware that loose fitting clothing can become caught in the drive tires.
10. Consult your physician if you are taking prescribed medication or if you have any certain physical limitations. Some medications and limitations may impair your ability to operate scooters in a safe manner.
11. Be aware when the drive mode is unlocked or locked.
12. Don’t remove anti-tipper if there is any-tipper equipped with the scooter.
13. Contact with tools can cause electrical shock and do not connect an extension cord to the AC/DC converter or the battery charger.
14. Do not attempt to lift or move your scooter by any of its removal parts, such as the armrests, seats, or shroud.
15. When climbing an incline, don’t drive at an angle up the face of the incline. Drive your scooter straight up the incline. This greatly reduces the possibility of a tip or a fall.
16. Don’t climb a slope steeper than the scooter’s limitation.
17. Don’t attempt to have your scooter proceed backward down any step, curb or other obstacle. This may cause the scooter to fall or tip.
18. Always reduce your speed and maintain a stable center of gravity when cornering sharply. Don’t corner sharply when driving scooters at higher speeds.
19. Operating in rain, snow, salt, mist conditions and on icy or slippery surfaces may have an adverse affect on the electrical system.
20. Never sit on your scooter when it is being used in connection with any type of lift or elevation product. Your scooter is not designed with such use in mind and any damage or injury incurred from such use is not the responsibility of Heartway.
21. Surfaces of the power scooter that can come into direct contact with the occupant’s skin and/or assistant’s skin during normal use and that are within occupant reach shall not exceed 41 °C. The motor surface can reach temperatures greater than 41°C after driving. Do not touch these

parts when disassembling the scooter or wait until the motor is cooled down.

22. The programming of the controller shall only be carried out by personnel, which is authorized by his manufacturer. A wrong programming can result in safety hazards for the occupant!
23. If the power scooter is switched off while driving on the horizontal at maximum speed at 7 km/h, it will come to a stop with the maximum stopping distance of 1.2 m. Please consider this distance when driving.
24. Drive-wheel needs to be switched to engaged-mode while transporting the power scooter with a car or airplane.
25. Surface temperatures can increase when exposed to external sources of heat.

◆ **Modifications**

Heartway Medical Product has designed and engineered power scooters to provide maximum utility. However, under no circumstances should you modify, add, remove, or disable any part or function of your power scooter. Personal injury and damage to the power chair may result.

1. Do not modify your power scooter in any way not authorized by Heartway. Do not use accessories if they have not been tested or approved for Heartway products.

◆ **Inspections prior to using your power scooter:**

1. If equipped with pneumatic tires, please check for proper tire inflations.
2. Please check all electrical connections and make sure they are tight and not corroded.
3. Please check all harness connections and make sure they are secured properly.
4. Please check the brakes.

◆ **Weight limitation.**

1. Please refer to the specifications table for weight capacity information. Power scooter is rated for a maximum weight capacity.
2. Stay within the specified weight capacity for your scooter. Exceeding the weight capacity voids your warranty. Heartway will not be held responsible for injuries or property damage resulting from failure to observe weight limitations.
3. Don't carry passengers on scooters. Carrying passengers on scooter may affect the center of gravity, resulting in a tip or a fall.

◆ **Tire inflation**

1. If your scooter is equipped with pneumatic tires, it is necessary to check the air pressure at least one time a week.
2. Proper inflation pressures will prolong the life your tires and ensure the smooth operation while riding.
3. Do not under-inflate or over-inflate your tires. It is critically important that 30-25 psi (2-2.4bar) tire pressure be maintained in pneumatic tires at all times.
4. Inflating your tires from an unregulated air source could over-inflate them, resulting in a burs tire.

◆ **Temperature**

1. Some of the parts of the power scooter are susceptible to change in temperature. The controller can only operate in temperature that ranges between -25°C ~ 50°C.
2. At extreme low temperatures, the batteries may freeze, and your power scooter may not be able to operate.

In extreme high temperatures, it may operate at slower speeds due to a safety feature of the controller that prevents damage to the motors and other electrical components.

ELECTROMAGNETIC INTERFERENCE (EMI)

The rapid development of electronics, especially in the area of communications, has saturated our environment with electromagnetic (EM) radio waves that are emitted by television, radio and communication signals. These EM wave are invisible and their strength increases as one approach the source. All electrical conductors act as antennas to the EM signals and, to varying degrees, all power wheelchairs and scooters are susceptible to electromagnetic interference (EMI). The interference could result in abnormal, unintentional movement and/or erratic control of the vehicle. The United States Food and drug Administration (FDA) suggests that the following statement be incorporated to the user's manual for all power scooter like the **S19F** Power scooters may as susceptible to electromagnetic interference (EMI), which is interfering electromagnetic energy emitted from sources such as radio stations, TV stations, amateur radio (HAN) transmitter, two-way radios, cellular phones and alarm systems of shops. The interference (from radio wave sources) can cause the power scooter to release its brakes, move by itself or move in unintended directions. It can also permanently damage the powered scooter's control system. The intensity of the EM energy can be measured in volts per meter (V/m).Each powered scooter can resist EMI up to a certain intensity. This is called "immunity level". The higher the immunity level the greater the protection. At this time, current technology is capable of providing at least 20 V/m of immunity level, which would provide useful protection against common sources of radiated EMI.

Following the warnings listed below should reduce the chance of unintended brake release or powered scooter movement that could result in serious injury:

1. Do not turn on hand-held personal communication devices such as citizens band (CB) radios and cellular phones while the powered scooter is turned on.
2. Be aware of nearby transmitters such as radio or TV stations and try to avoid coming close to them.
3. If unintended movement or brake release occurs, turn the powered scooter off as soon as it is safe.
4. Be aware that adding accessories or components, or modifying the powered scooter, may make it more susceptible to interference from radio wave sources (Note: It is difficult to evaluate the effect on the overall immunity of the powered scooter).
5. Report all incidents of unintended movement or brake release to the powered scooter manufacturer, and note whether there is a radio wave source nearby.

TURN OFF YOUR POWERED SCOOTER AS SOON AS POSSIBLE WHEN EXPERIENCING THE FOLLOWING:

- Unintentional scooter movements
- Unintended or uncontrollable direction.
- Unexpected brake release

The FDA has written to the manufacturers of power scooters asking them to test new products to be sure they provide a reasonable degree of immunity against EMI. The FDA requires that a powered wheelchair should

have an immunity level at least 20 V/m, which provides a reasonable degree of protection against more common sources of EMI. The higher the immunity level the greater the protection. Your powered scooter has an immunity level of 20 V/m which should protect against common sources of EMI. Warning: The scooter itself can disturb the performance of the electromagnetic fields such as emitted by alarm systems of shops.

TECHNICAL SPECIFICATIONS

MODEL	S19F
WEIGHT CAPACITY	115kgs(250 lbs)
SEAT: TYPE/SIZE	16" Fish-on
DRIVE WHEEL	9” Pneumatic Tire / 8” PU Tire
FRONT CASTER (WHEEL)	7” Pneumatic Tire / 7” PU Tire
REAR CASTER (ANTI-TIPPER)	YES
MAX SPEED	6KM/H
BATTERY SPECIFICATIONS	24V 11.5AH Li-Polymer
BATTERY RANGE	15 KM
CHARGER TYPE	2.5Amp
CONTROLLER TYPE	S-DRIVE 45Amp
MOTOR TYPE	4-Pole 270W
WEIGHT: W/ BATTERY	29kgs
WEIGHT: W/O BATTERY	26kgs
TURNING RADIUS	900mm
SUSPENSION	INDEGO SUSPENSION
LENGTH	940mm
WIDTH	530mm
HEIGHT	945mm
Folded Size	760mm*530mm*460mm
SEAT WIDTH	410mm
SEAT HEIGHT	320mm
SEAT DEPTH	330mm
BACK HEIGHT	360mm
WHEEL BASE	695mm
GROUND CLEARANCE	70mm
Max Safe Slope	3 Degree
FOOTRESTS	420mm

ADJUSTMENT

It is very easy to assemble your S19F scooter. Please follow the procedure below. S19F power scooter has aluminum alloy body and can be easily folded to fit in the car for transportation. It also has easy to use controls and adjustable tiller positioning.

See the following four steps to fold the scooter

<table>
<tr>
<td>
Step on the red pedal to unlock the scooter</td>
<td>
Fold the chair</td>
</tr>
<tr>
<td> 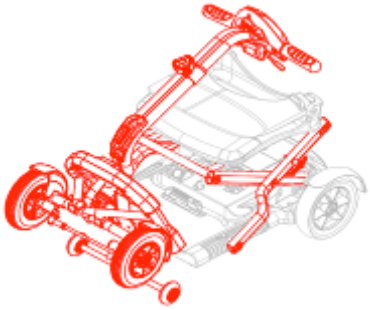
Pull down the tiller to fold the scooter.
Push the tiller softly until the tiller locks.</td>
<td> 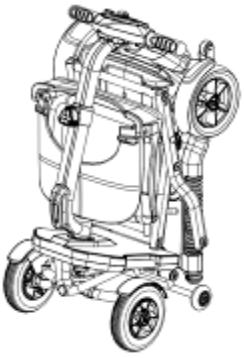
Completed</td>
</tr>
</table>

How to Un-Fold the Scooter

- Lean the folded scooter on the floor resting on the rear wheel
- Pull the red lever on the side of the scooter and begin unfolding it from the tiller.
- Make sure to open the tiller until the two front wheels touch the ground and you hear a click indicating sound that the scooter is locked in the pen position.
- Unfold the scooter backrest. Make sure the free-wheel lever is in the engaged position.
- Sit on the scooter and adjust your desired height making sure the adjustment knob is locked into position.
- Insert the key and turn it to power the scooter. Begin using your scooter and enjoy your ride!

OPERATION OF CONTROL PANEL

The power scooter is simple to operate. However, we recommend that you read carefully the following instructions to become familiarized with your new vehicle.

A Word of Caution:

Before you turn the power on, always be aware of the environment that surrounds you to select your desired speed. For indoor environments we recommend that you select the slowest speed setting. For outdoor operation of this vehicle we recommend that you select a speed that is comfortable for you to control it safely.

The following steps are required to operate your vehicle safely with the controller.

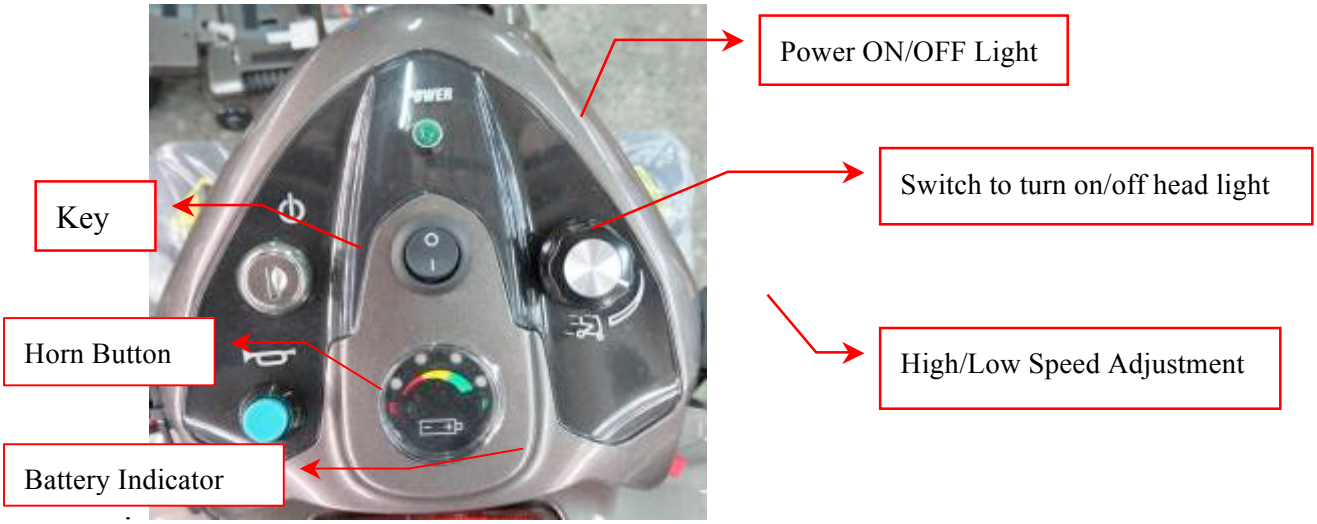

Button functions

1. Battery Indicator: When your scooter is switched on, the needle on the meter will move across the scale from the left 'red' sector towards the 'green' sector, indicating the state of charge in your batteries. As the power is used up in your batteries, the needle will slowly towards the 'red' sector indicating the state of charge at that precise time. When the needle is fully over to the right, the batteries are fully charged. When the needle falls towards the red sector, your batteries are losing power, but you will still have power to spare. When the needle falls into the red sector, your batteries are low in power and need to be recharged. It is wise to recharge your batteries when the needle enters the red zone (see Batteries and Battery Charging section of this manual).
2. High/Low Speed Adjustment: This allows you to pre-select your desired speed. The adjuster is proportional to speed and can be set anywhere between minimum and maximum. Turn the adjuster knob counter-clockwise to minimum for a very gentle operation, and clockwise towards maximum to increase your speed.
3. Power ON/OFF Light: The light will turn on if you insert the key. The light will turn off if you take out the key.

4. Horn button: Press this button to sound the horn.(Easy operation for left hand or right hand)

Driving:

A) Controller ON/OFF Switch

Insert the key to power on the scooter (Remove the key to power off). Swing the finger lever control forward or backward to control the driving direction of the scooter (The finger lever control is located at both sides of the controller and the returning of the finger lever control to its neutral position,(center), will reduce the speed and stop the vehicle by automatically applying the electro-magnetic brakes.

Finger Lever Control/Maximum Force Applied on Lever is 4N

B) Speed Control

Turn the adjuster knob clockwise towards maximum to increase your speed, and counter-clockwise toward minimum to slow down your speed.

C) Finger Lever Control

The finger lever control can also control the speed of your vehicle. The deeper you press on the finger lever (forward / backward), the faster the vehicle will go.

Notes:

- ⇨ After inserting the key into controller ON/OFF port, the light of power ON/OFF will turn on for a few seconds during self-checking process.
- ⇨ When the vehicle is in operation, the surface of the charger will become slightly warm.
- ⇨ In case of emergency, let go of the finger lever control and the vehicle will come to a stop.

Control Panel Display

1. The control panel display is a multifunction visual display. It can provide a lot of information of the vehicle. When the needle falls into the red sector, your batteries are low on power and need to be recharged. It is wise to recharge your batteries when the needle enters the red zone. The remaining battery needle only goes lower when using the battery, regardless the battery voltage. The remaining battery meter needle goes higher only when recharging battery in progress.
2. System will power off when the battery voltage is lower than 21.0V.
3. System will be automatically power-off when the vehicle is not in use over 30 minutes. You need

to remove the key and insert the key to restart the scooter.

4.

Free-Wheeling:

1. The motors are designed to engage the electromagnetic brakes when the vehicle is not in use or when the power is OFF. They also have a manual feature that allows them to “free-wheel” so the scooter can be moved without turning it on. Free-wheeling is accomplished by adjusting the free-wheeling levers to the free-wheeling position.

Free- Wheeling Lever/ Maximum required hand-arm force on the lever is 19 N for engaging and 35 N for disengaging

Warning !

- ⇨ Never free-wheel S19F on a slope.
- ⇨ Never free-wheel the motors while operating your vehicle.
- ⇨ Always remember to engage the motors before turning the power ON.
- ⇨ Do not attempt to disengage the drive motors while seated on your S19F. Personal injury may result. Ask your attendant for assistance.
- ⇨ Do not disengage the drive motors while on an incline. This power mobility could roll uncontrollably on its own, causing personal injury.

Electromagnetic Brakes:

Your power scooter comes with Electromagnetic Brakes., i.e. an automatic magnetic disc safety brake which is also known as Fail-Safe brake. The electro-magnetic Brakes are automatic and work when the power scooter is ON but in a steady state (i.e. Wigwag is released to the neutral position), even when the scooter is on a slope. The Electromagnetic Brakes will also be set whenever the power scooter is OFF, but the motor levers are in the engaged (vertical) position.

Parking brake:

There is an automatic parking brake function included in the electromagnetic brake. The scooter will stop when the motor is engaged and the power switch is off or when the power switch is on and the wigwag is in the neutral position. If the scooter is in the free wheel mode (motor is disengaged), you can use the manual parking brake function by moving the engaging/disengaging lever back into the engaged position by an attendant.

Thermal Protection:

Your power scooter controller is equipped with a safety system called thermal rollback. A built-in circuit monitors the temperature of the controller and motor. In case of excessive heat of the controller

and motor, the controllers will cut-off the power to allow the electrical components to cool down. Although your power scooter will resume its normal speed when the temperature returns to a safe level, we recommend to wait for 5 minutes before restarting to allow the components to cool down.

BATTERY & CHARGING INSTRUCTION

Lead-Acid Battery

We recommend that you use deep-cycle batteries that are sealed and maintenance free for your power scooter. Both sealed lead-acid (SLA) and gel cell are deep-cycle batteries and are similar in performance. Deep-cycle batteries are specifically designed to provide power, drain down, and then accept a relatively quick recharge. Lead-acid batteries should be charged as often as possible.

IMPORTANT NOTICE: Do not dispose of batteries in fire. Batteries should be recycled or disposed of as per state and local guidelines.

Specification of the battery that we recommend for S19F is

Type:	Deep –cycle sealed lead-acid or gel cell
Size:	12AH
Voltage:	12V each
Amp Hours:	12 amp hours

Lithium Battery (11.5A)

Specifications	
Nominal Voltage	24V
Nominal Capacity	11,500 m AH
Charging Current	2,000 mA
Charging Time	5-6 Hours
Ambient (Celsius)	Charge +10 C to +40 C degree
	Discharge -20 C to +65 C degree
Temperature Storage	< or = 30 C degree
Weight	Max 2 KG
Length* Width* Height	191 * 78 * 114 mm

BATTERY CHARGER

The battery charger takes the standard wall outlet voltage (alternating current) and converts it into DC voltage (direct current).The batteries use direct current to run your power scooter. When the batteries are fully charged, the amperage from the charger is almost at zero. This is how the charger maintains a charge but does not overcharge the battery.

Note 1: The batteries cannot be charged if they were discharged to nearly zero voltage.

Note 2: The powered scooter meets the requirement of ISO 7176-14:2008 and ISO 7176-21:2003.

Note 3: Only use the battery charger type provided by the scooter supplier. The use of any different type of

charger can be hazardous and need the approval of the manufacturer.

Charger Indicator Signal Chart

Indicator / Signal	POWER (bi-color LED)	STATUS (dual color LED)
*Stand-by *End of charge	Constant RED	Constant GREEN
*Pre-charge state *Charge state	ON	Constant RED
*Over current *Over voltage	ON	Flash between RED and GREEN every second
*Zero voltage pre-charge state *Short circuit	ON	Flash between RED and GREEN.RED:16ms;GREEN:496ms

CHARGING INSTRUCTIONS

- ⇨ Attention! Connect charger first to AC power before connecting the battery to the charger. Plug into AC mains the power on indicator will be on and the status indicator will be Green, then connecting the battery pack to charger.
- ⇨ If short circuit at output is found, the status indicator will flash between RED and GREEN. The flash will be there until the system is reset and the short part is removed
- ⇨ During charging, the status indicator turns on RED. When fully charged, it turns on GREEN.
- ⇨ To avoid the case of failed battery pack, when the charger stays in pre-charge stage longer than 5 hours, it will stop charging and the status indicator will be pulsed with a one second to indicate per-charge error.
- ⇨ During charging, user can remove the battery from charger any time as he/she wants. Users also could start to charge the battery at any time.
- ⇨ In case of any problem, please contact your authorized dealer for assistance

BATTERY INDICATOR

A battery indicator is to provide information about the travelling range remaining.

Indicator	Travelling Range Remaining
Full	15 km Traveling Range Remaining
Green Area	7~15 km Travelling Range Remaining
Yellow Area	4~7 km Travelling Range Remaining
Red Area	1~4 km Travelling Range Remaining

End	0 Kilometer

MAINTENANCE & REPAIR

Your power scooter is designed for minimal maintenance. However, like any motorized vehicle it requires routine maintenance. To keep your S19F for years of trouble-free operation, we recommend you follow the following maintenance checks as scheduled.

DAILY CHECKS

1. Visual check on the conditions of tires.
2. Inspect the battery condition meter on the controller to determine if batteries need to be charged.

MONTHLY CHECKS

1. Visually inspect the controller harnesses. Make sure that they are not frayed, cut or have any exposed wires.

SEMI-ANNUAL CHECKS

1. Check the motor brushes. We recommended that your authorized dealer inspect the brushes every six months or sooner if your power scooter is not operating smoothly. If inspection determines excessive wear on the brushes, they must be replaced or motor damage will result.

CHECKS:

- Make sure to keep the controller clean while protecting it from rain or water. Never hose off your power scooter or place it in direct contact with water.
- Keep wheels free from lint, hair, sand and carpet fibers.
- Visually inspect the tire tread. If less than 1mm (1/32”), please have your tires replaced by your local dealer.
- All upholstery can be washed with warm water and mild soap. Occasionally check the seat and back for sagging, cuts and tears. Replace if necessary. Do not store your scooter in damp or humid conditions as this will lead to mildew and rapid deterioration of the upholstery parts.
- All moving mechanism will benefit from simple lubrication and inspection. Lubricate using petroleum jelly or light oil. Do not use too much oil, otherwise small drips could stain and damage carpets and furnishings etc. Always perform a general inspection of the tightness of all nuts and bolts.

TROUBLESHOOTING & FAULT REPAIR

P&G S-Drive 45 Amp controller: Your scooter is fitted with S-Drive controller, which continuously monitors the operating conditions of your scooter. If it detects a problem it will indicate with error message by flashing light on the power ON/ OFF light. You must count the number of the flash, and see the list to check what kind of error has happened according to the number)

1 Bar	The battery needs charging or there is a bad connection to the battery. Check the connections to the battery. If the connections are good, try charging the battery.
2 Bar	There is a bad connection to the motor. Check all connections between the motor and the controller.
3 Bar	The motor has a short circuit to a battery connection. Contact your service agent.
4 Bar	The freewheel switch is activated or the manual brake disengagement mechanism is operated. Check the position of the switch or lever.
5 Bar	The motor is stalled. Or, The controller is over temperature or in current foldback.
6 Bar	'The S-drive is being inhibited from driving. Inhibit 2 is active'. This may be because the battery charger is connected or the seat is not in the driving position.
7 Bar	A throttle fault is indicated. Make sure that the throttle is in the rest position before switching on the scooter.
8 Bar	A controller fault is indicated. Make sure that all connections are secure.
9 Bar	The parking brakes have a bad connection. Check the parking brake and motor connections. Make sure the controller connections are secure.
10 Bar	An excessive voltage has been applied to the controller. This is usually caused by a poor battery connection. Check the battery connections.

Note:

If you experience any technical problems, it is recommended that you check with your local dealer before attempting to troubleshoot on your own.The following symptoms could indicate a serious problem with your power scooter. Contact your local dealer if any of the following arises:

1. Motor noise
2. Frayed harnesses
3. Cracked or broken connectors
4. Uneven wear on any of tires
5. Jerky motion
6. Pulling to one side
7. Bent or broken wheel assemblies
8. Does not power up
9. Powers up, but does not move

CIRCUIT DIAGRAM

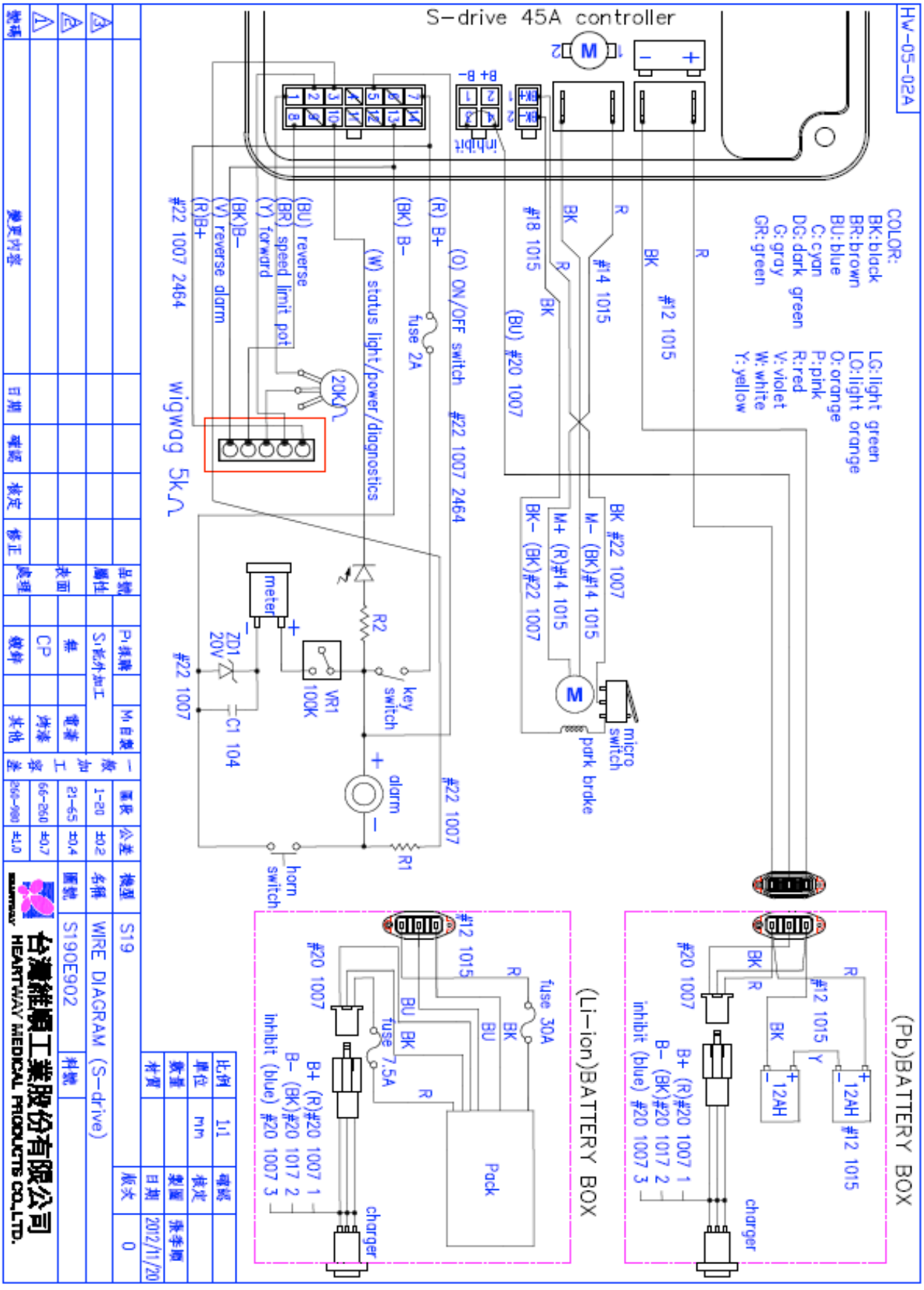

BOM LIST DRAWING

① POTENTIONMETER COMBINATION	⑲ MAIN COVER	㊲ INNER CROSS BAR
② HANDLE BAR	⑳ CARPET	㊳ OUTSIDE CROSS BAR
③ PLUG OF STEM	㉑ FRONT COVER	㊴ SCREW
④ PLUG OF HANDLE BAR	㉒ FRONT FRAME	㊵ RELEASE HANDLE
⑤ STEM	㉓ CONNECTED BAR ASM	㊶ CARRYING HANDLE
⑥ LOCKING KNOB	㉔ AXIS TUBE	㊷ BATTERY COVER
⑦ WIRE LEADING COVER	㉕ CHAIR	㊸ BATTERY
⑧ STEM ASM	㉖ FRONT SEAT FRAME	㊹ BATTERY COVER
⑨ FRONT SUSPENSION ASM	㉗ PLUG OF SEAT FRAME	㊺ REAR REFLECTER
⑩ ANTI-COLLISION BLOCK	㉘ REAR SEAT FRAME	㊻ REAR FENDER
⑪ FRONT WHEEL	㉙ CONTROLLER	㊼ BREAKET OF MOTOR
⑫ WIGWAG	㉚ BREAKET OF CONTROLLER	㊽ TRANSAXLE
⑬ HANDLE GRIP	㉛ BOTTOM COVER	㊾ REAR WHEEL
⑭ STEM ASM	㉜ SLIDER BAR	㊿ MAIN FRAME ASM
⑮ FIXED SCREW	㉝ RUBBER DUST COVER	
⑯ ASSISTIVE WHEEL	㉞ LOCKING PIN	
⑰ CARPET	㉟ PLUG OF SLIDER	
⑱ RELEASE HANDLE	㊱ PROTECT COVER	

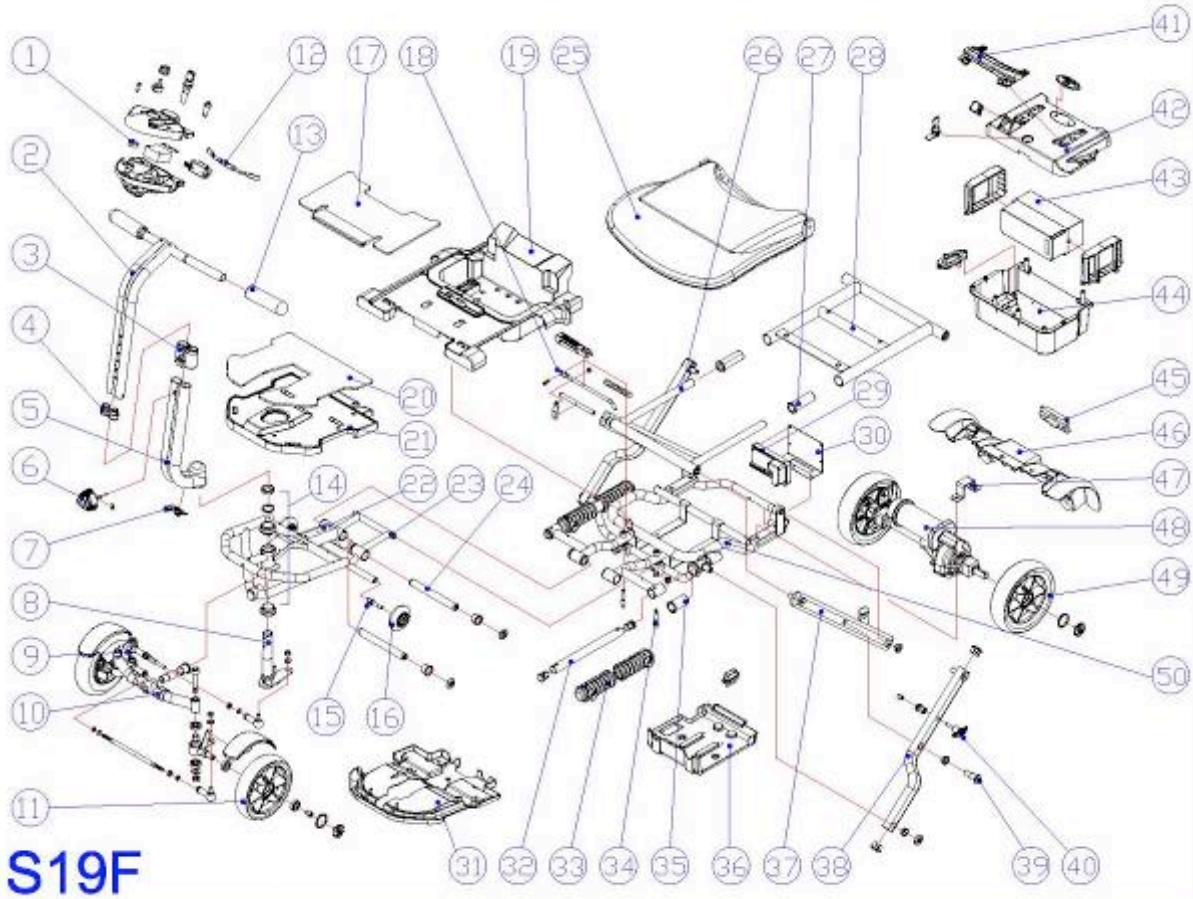

WARRANTY DECLARATION

Quality/ Warranty Declaration

Products are to be fit for purpose and of excellent quality and performance. For valid warranty claims Heartway will, at their discretion, replace/ repair/ refund items mutually agreed to be defective.

Heartway's Warranty as Following:

- Frame: Two-year limited warranty
- Controllers: One-and-a-half-year limited warranty
- Electronic Components and Charger: One-year limited warranty
- Warranty Exclusion. The following items are not covered by warranty.

✧ Motor brushes	✧ Wheel Tires	✧ Arm Pads
✧ Seat Cushion	✧ Fuses / Bulbs	✧ Tiller Cover
✧ Rear Shroud	✧ Front Shroud	✧ Batteries and Consumable parts

Any damage or defect of any nature occurring from the misuse, abuse of the product, improper operation or improper storage is not to be covered. The warranty is to start from the date of arrival of our products.

Normally, the average lifespan of a scooter will last 5-year long. Heartway will be able to provide the spare-part support for five-year long after scooters purchased. Note: If you encounter a damaged or cracked battery; please enclose it in a plastic bag and call the local authorized dealers immediately for instructions on disposal and recycling.

HEARTWAY

HEARTWAY MEDICAL PRODUCTS CO., LTD.

NO. 6, ROAD 25, TAICHUNG INDUSTRIAL PARK,